MOBILIFT CX

Operator Manual

Adaptive Engineering Inc.

A E I

Table of Contents

SCOPE: This document applies to the Mobilift CX, CX-CE,& CX-UK

Adaptive Engineering Inc.
4033 – 14th Street SE
Calgary Alberta, Canada T2G 3K6
(403) 243-9400
Fax:(403) 243-9455
1-800-448-4652

Email: info@adaptivelifts.com
Web: www.adaptivelifts.com

MAJOR COMPONENTS

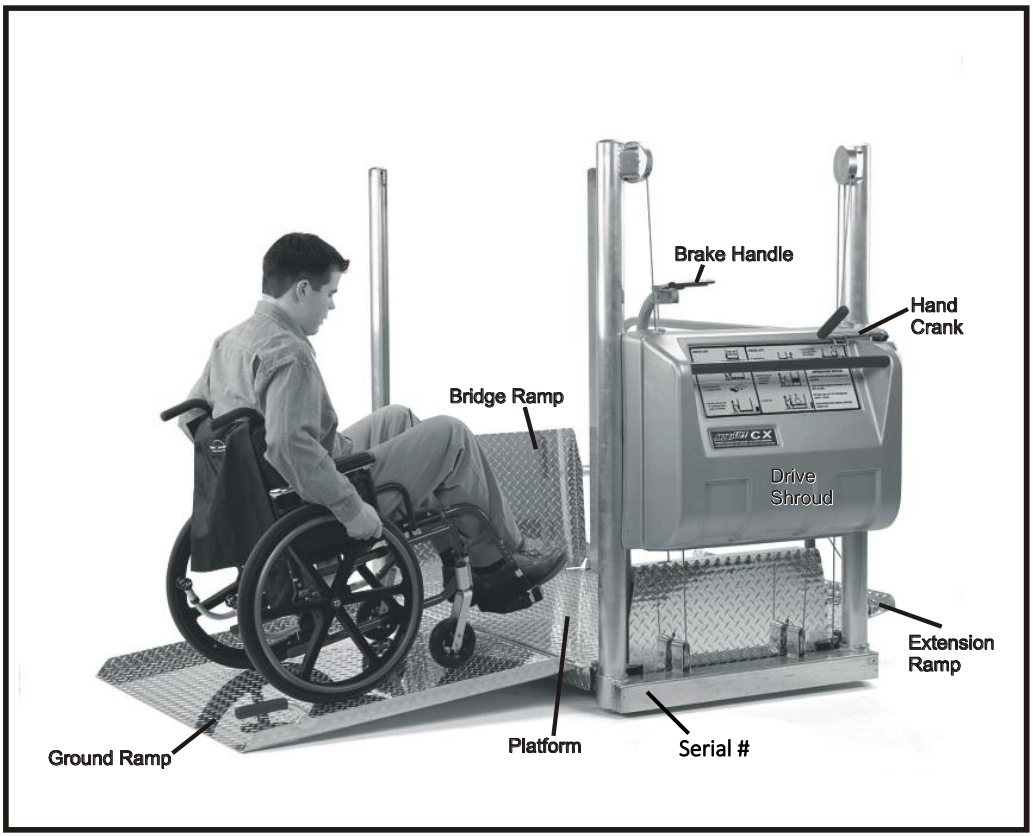

SPECIFICATIONS

Standard Unit (North American Users)			
Weight	268 lb (122 kg)	Max Lifting Height	60” (1.52 m)
Overall Length	72” (1.83 m)	Minimum	
Overall Width	37.5” (0.95 m)	Safety Factors	Cables 7.0
Capacity (Can & US)	600 lb (273 kg)		Structure 5.0
Platform Size	34” x 56” (0.86 x 1.42 m)		
CE or UKCA Option: (European Users)			
Capacity (Europe)	250 kg (550 lb)		
Safety Factors	Cables 10.0		
	Structure 5.4		

The serial number can be found on the lift as shown above and on the far side of the deck shroud (not shown). The serial number must be given when ordering parts and should be used to record all maintenance work and inspections.

MAJOR COMPONENTS – TOP VIEW

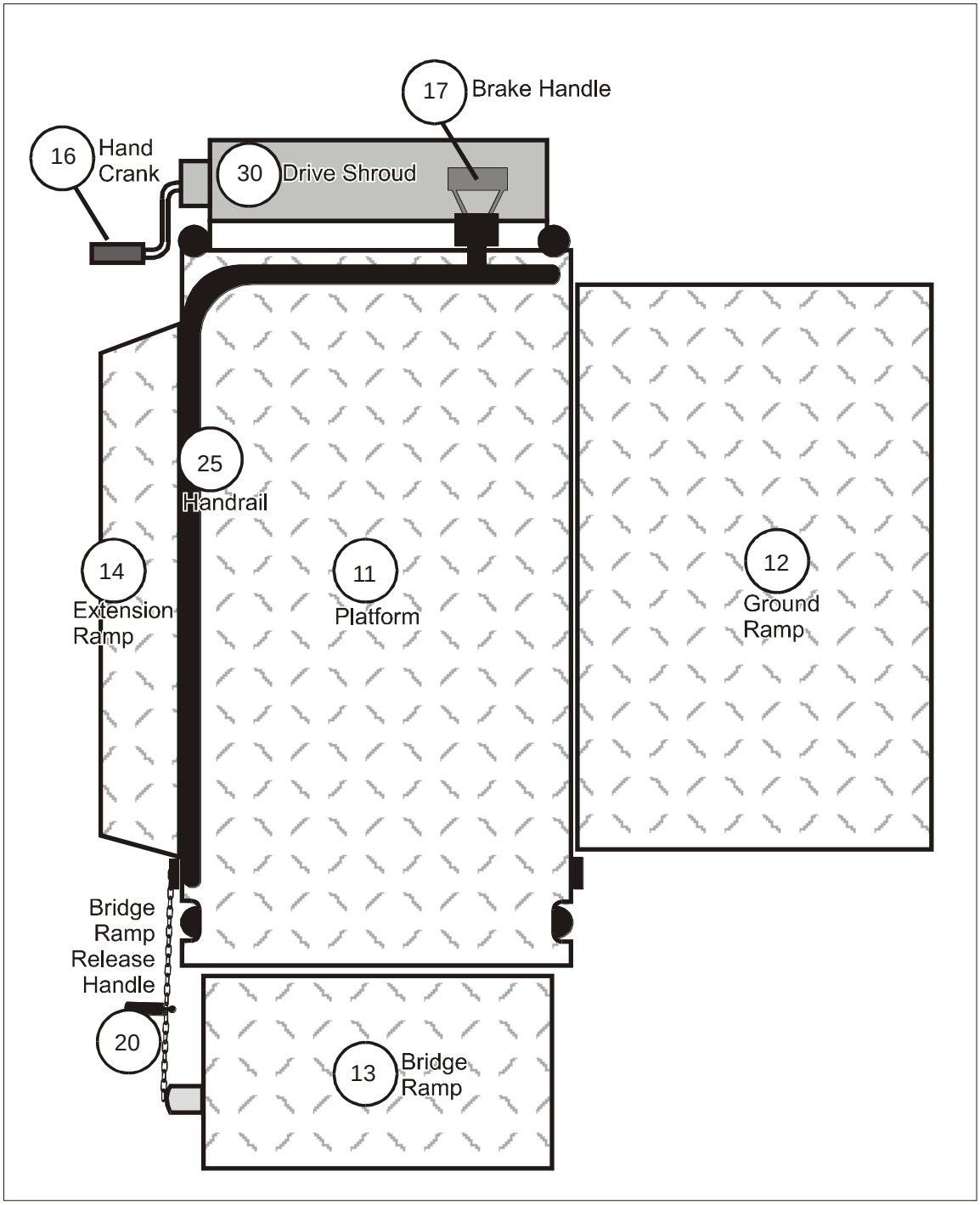

FEATURES

- Single operator set-up and use
- Silent, manual operation
- Pictogram instruction decals
- Auto fail-safe crank with load activated drum brakes
- 20” (0.51 m) long bridge ramp
- Automatic “fail-safe” parking brakes prevent rolling
- Movable with passenger on platform (up to 30 ft/10 m on smooth hard surfaces)
- Plastic-capped handrails
- Rated for indoor or outdoor operations -40F to +130F (-40C to + 54C)
- Minimal service requirements

OPTIONS

The following options are commonly requested for the Mobilift CX:

- Powder coating to enhance the aesthetics of the lift
- Automatic leveling device
- Opposite side boarding (mirror image of standard)
- Opposite side crank position (mirror image of standard)
- Stair bumper kit
- Rough terrain kit for movement on rough/soft surfaces
- Enclosure with solid sides or mesh sides
- Choice of bridge ramp length upgrades:
  - 30” (.76 m)
  - 33” (.83 m)
  - 40” (1.02 m)
  - 46” (1.17 m) Includes built-in folding handrails
  - 56” (1.42 m) Includes built-in folding handrails
  - 66” (1.67 m) Includes built-in folding handrails
- CE or UKCA Compliance Package (includes the following)
  - 0.84 m (33”) Bridge Ramp
  - 4.76 mm (3/16”) lifting, return and paralleling Cables
  - Metric decals
- Tether/bolt-down systems to stabilize the lift

Contact **Adaptive Engineering Inc.** for more information.

Phone: 1 (800) 448-4652 or (403) 243-9400
Web: www.AdaptiveLifts.com
Email: info@AdaptiveLifts.com

MATERIALS

- 7x19 Aircraft-type stainless steel cables
- 6061 T-6 / 5052 H32 Aluminum frame
- 316 Stainless Steel Fittings and Fasteners
- Industrial duty rubber wheels
- UV-rated ABS & PVC plastics

COMPREHENSIVE TWO-YEAR WARRANTY

- Adaptive Engineering Inc. warrants the Mobilift CX to be free from manufacturing or material defects for two years from the date of invoice.
- Damage caused by vandalism, abuse, or misuse is not covered by this warranty.
- Normal wear and tear are not covered by this warranty.
- This warranty is void in the following cases:
    - the Mobilift is modified without written authorization from Adaptive Engineering Inc;
    - the lift is not inspected at least annual and a written record kept;
    - repairs are not conducted by authorized personnel using parts and instructions provided by Adaptive Engineering Inc.

UNDER NORMAL OPERATING CONDITIONS THE MAX DESIGN LIFE OF THE MOBILIFT CX IS 20 YEARS AND SHOULD BE REMOVED FROM SERVICE AND BE REPLACED THEREAFTER.
UNITS IN OUTDOOR SERVICE WITHIN 3 KM OF SALTWATER MAY NEED TO BE REMOVED FROM SERVICE EARLIER THAN 20 YEARS.

FEEDBACK

Our goal is to provide safe, high quality, and easy-to-use products. Customer satisfaction is of great importance to us. To continue our tradition of quality and response to customer needs, we welcome any comments or suggestions. Please call us at **1 (800) 448-4652** or email **info@adaptivelifts.com**.

WARNINGS

- Always park lift with wheels off the ground unless being parked in a locked enclosure.
- Store the lift in a secure area or use a lock and cable to prevent unauthorized use of the Mobilift. The Mobilift is light enough to be moved by vandals even with the wheels raised.

- Fold the hand crank in when not in use. This provides a mechanical lock for the drive system and prevents damage to the handle.
- Use the ground ramp at ground level only to prevent overturning.
- Wheelchair users should approach the lift at 2mph (3km/h) or slower to reduce the risk of overturning
- Lift is not to be used to transport heavy freight loads. Use as designed, for wheelchair access only.
- Only deploy the Mobilift on stable, hard, level surfaces
- Do not operate lift or perform maintenance unless familiar with operating manual. Consult with Adaptive Engineering Inc., before performing any mechanical repairs.
- **Repairs and adjustments must be performed by authorized personnel only, using parts and instructions provided by Adaptive Engineering Inc**
- Make sure the bridge ramp overlaps the stage by at least 6” (0.15 m)
- European models should overlap the stage by the amount indicated on the “Warnings” decal (0.5m).

If you have any questions about the operation or maintenance of this product, please contact Adaptive Engineering Inc.

GENERAL OPERATING NOTES

We strongly recommend that users review the Operation Video on our website at www.adaptivelifts.com/cx.html.

- When turning the hand crank, maintain a slight outward pull to prevent the hand crank from folding and catching. The handle is spring loaded inward for safety.

- The load on the platform affects the force required to raise or lower with the hand crank. This is due to the patented “load activated” braking system, which is an essential safety feature of the drive system.

- The drive’s braking system is very reliable. Additional safety is gained by folding the hand crank in the vertical position. This acts as a secondary mechanical lock for the drive system and is the reason why the hand crank must always be folded in the vertical position when not in use.

- Persons in wheelchairs must feel safe when being lifted. The Mobilift CX lift has established a reputation for reliability and safety. If the person being lifted expresses any uncertainty about the lift, assure them:

- Every lift is load tested to over 3,000 lbs (1360 kg) before being placed in service. (This is about the weight of a mid-sized car)
- There is no single component in the lift that can allow the platform to drop in the event of failure.
- Critical components have been tested successfully for extreme weather performance from –50 degrees to +130 degrees Fahrenheit. (-45 C to +54 C)
- Over 3,000 Mobilifts have been deployed around the world with no serious accidents or incidents reported in over 25 years.

- LOCKING: The loop on the arm of the hand crank is designed for a locking cable (available upon request.)
- European users must follow the operating procedures for CE and UKCA lifts in order to comply with regulations for the European Common market.

ALWAYS:

- Park the lift in an enclosure or with the wheels off the ground.

- Return the hand crank to the vertical, folded position and lock when not being used.

OPERATION

Initial Setup: Installing the Lift Height Marker Decal

Note: Only apply the lift height marker decal on lifts that will be used in to access one location only.

To install the lift height marker decal:

1. Position the lift at the location being accessed
2. Crank the deck up to an appropriate height such that the ramp does not have a slope of more than 1:10. (1:8 is allowed when passenger is assisted by an attendant)
3. Place red marker decal provided on corner post as shown.

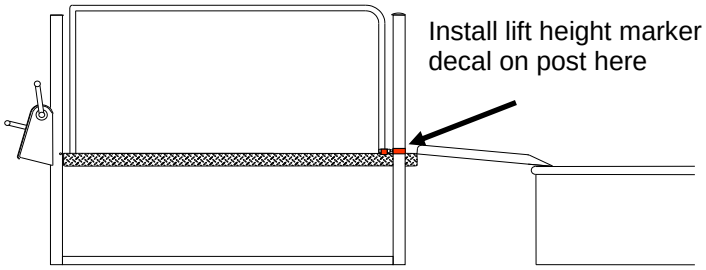

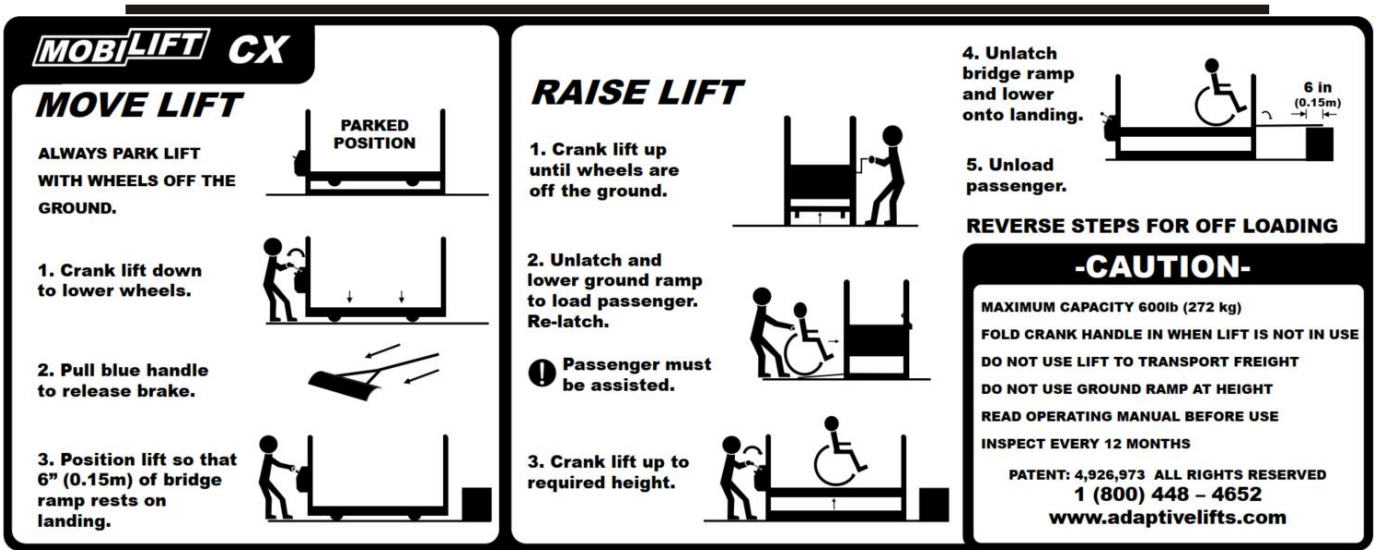

Note: Refer to the operator decal like the one depicted above specific to your lift (for CX-CE, CX-800, etc.)

Moving the Mobilift CX

1. Lower the lift platform until the wheels contact the ground and the lift frame rises off the ground. Fold the hand crank in the vertical position.

2. Pull the blue brake handle down to the push handle with the left hand to release the automatic parking brake.

3. Move the lift to the desired location. The brake handle must be held on the push handle to prevent the brakes from engaging.

4. Position the lift so the front (bridge ramp end) is about 6 to 12" (0.15 to 0.30 m) from the stage or platform requiring wheelchair access.

WARNING:
On basic CE lifts (equipped with 0.84 m bridge ramps with no handrails) the bridge ramp should overlap the landing by at least 0.50 m to avoid creating a gap that walking passengers could fall through.

Positioning the Mobilift CX in Restricted Spaces

For problem areas with limited space, the passenger can be placed on the lift before being moved into position. Even with a load, maneuvering is easy and the wheels automatically retract when the platform is raised, maximizing the lift's stability. The person-on-lift option should only be used for short distances (up to 30 ft or 10m) and on smooth hard surfaces. Do not use this method if lift has the Rough Terrain option with folding wheels.

Loading and Lifting a Wheelchair

1. Before loading a wheelchair, the lift's wheels must be raised clear of the ground so the lift frame can sit firmly on the ground. To do this, swing the hand crank out and turn it clockwise until the wheels are just barely off the ground. Return the hand crank to the vertical, folded position.

> NOTE:
> European users must board the wheelchair while the lift is on its wheels: do not raise the wheels clear of the ground. Parking brakes hold the lift in place.

2. Release the ground ramp (large ramp on the left side) by pushing on the ground ramp while releasing the blue handgrip from the keyhole.

3. Lower the ground ramp to the ground. Notice that the extension ramp on the right side of the platform has lowered to create extra room to maneuver the wheelchair.

> WARNING:
> The ground ramp should never be used for loading passengers other than at ground height due to the risk of tipping.

4. Push the wheelchair up the ground ramp so the passenger is facing forward (toward the bridge ramp).
   - We recommend assisting all passengers as they board the Mobilift
   - Users may find it preferable to back onto the lift, particularly if they are using a large scooter.
   - People with crutches or canes can also use the lift. They should position themselves in the right, rear corner of the lift so there is a handrail on two sides.

> WARNING:
> Wheelchair users should approach the lift no faster than 2 mph (3km/h) to prevent tipping.

5. Once the wheelchair is in place, and the wheelchair brakes applied, the ground ramp can be raised and re-latched.

6. The wheelchair is ready to be lifted to stage height.

7. Swing the hand crank out and turn it clockwise until the platform is level or slightly higher than the stage. Note that the hand crank is sprng-loaded inward for safety so users must always apply a slight outward pull on the crank handle.

8. Once the lift is raised to stage height, the bridge ramp is lowered onto the stage. The bridge ramp handle is on the front, right side of the lift and must be operated by the operator, from ground level. Make sure there is at least a 6” overlap of bridge ramp on the stage.

9. The wheelchair can move forward onto the stage.

Lowering and Unloading a Wheelchair

When moving a wheelchair from a stage or platform down to ground level, reverse the “Loading and Lifting a wheelchair” instructions. However, the wheelchair should be facing forward when it comes off the elevated platform and should move forward down the ground ramp once it reaches ground level.

Moving through Narrow Doorways*

*If not equipped with Narrow Door Option.
To maneuver the Mobilift CX through a narrow door it is necessary to remove the handrail and ground ramp, and to tip the lift sideways. The steps are:

1. Remove the five bolts securing the handrail using a 7/16” socket wrench and a Phillips screwdriver. Labeled 1 on Figure 1.

2. Remove the two bolts securing the two brake handle pulleys (Part 17 on Rear Assembly diagram) Use two 7/16” wrenches. Strap the cable to the lift so the cable doesn’t drag on the ground. Labeled 2 on Figure 1.

3. Remove the bolt securing the bridge ramp latch using two 7/16” wrenches. Labeled 3 on Figure 1.

4. Remove the ground ramp hinge bolt using a 7/16” wrench and Phillips screwdriver, then remove the hinge pin to remove the ground ramp. Labeled 4 on Figure 1.

5. Remove the nut and bolt securing the ground ramp release handle to the handrail. Use two 7/16” wrenches, (See part 19 on Rear Assembly Diagram). Labeled 5 on Figure 1.

6. Tip the lift on its side as shown in Figure 2 and carefully slide and rotate it through the door. To make maneuvering easier and reduce the risk of damage to the floor, we recommend placing the lift on a 4-wheel dolly or a large piece of carpet.

7. Reinstall the handrail, ground ramp and accessory pieces, ensuring that they are secure and tightened in place.

Note: After re-assembly, all pulleys should spin freely (Items 2 & 5)

Maneuvering Through Narrow Doorway

Figure 1

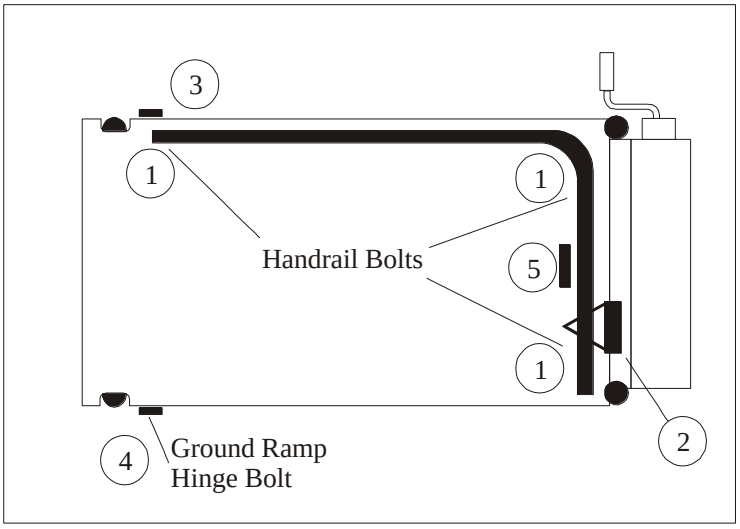

Figure 2

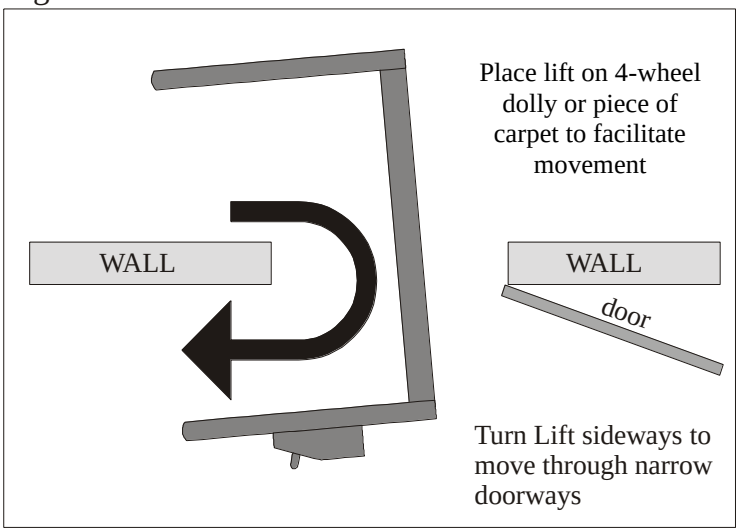

MAINTENANCE

Operators of the Mobilift CX should perform a quick visual inspection of the lift before operating. All visible cables and components should be checked for any signs of wear or vandalism**. Contact Adaptive Engineering Inc. if any problems arise. Phone: 1 (800) 448-4652 or (403) 243-9400**
Email: info@AdaptiveLifts.com

The Mobilift CX must be inspected officially once every six months in the UK and Europe and annually in most other jurisdictions. Users should check the requirements in their local areas or contact Adaptive Engineering Inc for guidance.

Annual/Biannual inspections and repairs must be conducted by personnel authorized by Adaptive Engineering Inc. using parts and instructions provided by our company.

Adaptive Engineering Inc. accepts no liability for any failures, damages, or injuries to or from the equipment as a result of substituting parts other than those authorized.

As with any piece of safety equipment, the CX mobile wheelchair lift must be on a documented preventive maintenance program. A suggested inspection report form is included at the end of this manual. Users with an established preventive maintenance system can incorporate these requirements as necessary.

The lift is designed and manufactured to minimize maintenance work. All exposed materials are aluminum, stainless steel, UV-rated polymers, or electroplated steel. The brakes may squeal as the lift is being cranked, in the same way that automobile brakes squeal. This is normal, and under no circumstances should these brakes be cleaned with solvents, nor should they be sprayed with aerosol lubricants such as WD40, LPS, silicon or any type of oil or grease.

The only parts that require lubrication are:

- The DRIVE CHAINS (part 42 in the *Drive System* picture)
- The PLATFORM COUNTERBALANCE SPRING (part 55)

These parts maybe lubricated with lithium grease to prevent corrosion.

<u>EXTREME CARE</u> must be taken to ensure that the main lifting brakes are not lubricated (critical for safety).

ADJUSTMENTS AND REPAIRS

Any adjustments or repairs required on the lift must be performed by personnel authorized by Adaptive Engineering Inc using parts and instructions provided by our company.

If the lift has been vandalized or damaged such that welding or machining is required, it must be carried out by qualified tradespeople. The people performing the repairs should refer to the manufacturer's literature and discuss the repairs with the us if necessary.

DANGER! Many Mobilifts use high-energy springs and/or gas cylinders. Do not attempt to adjust or repair these parts without contacting Adaptive Engineering Inc for guidance.

COMPONENTS – TOP VIEW

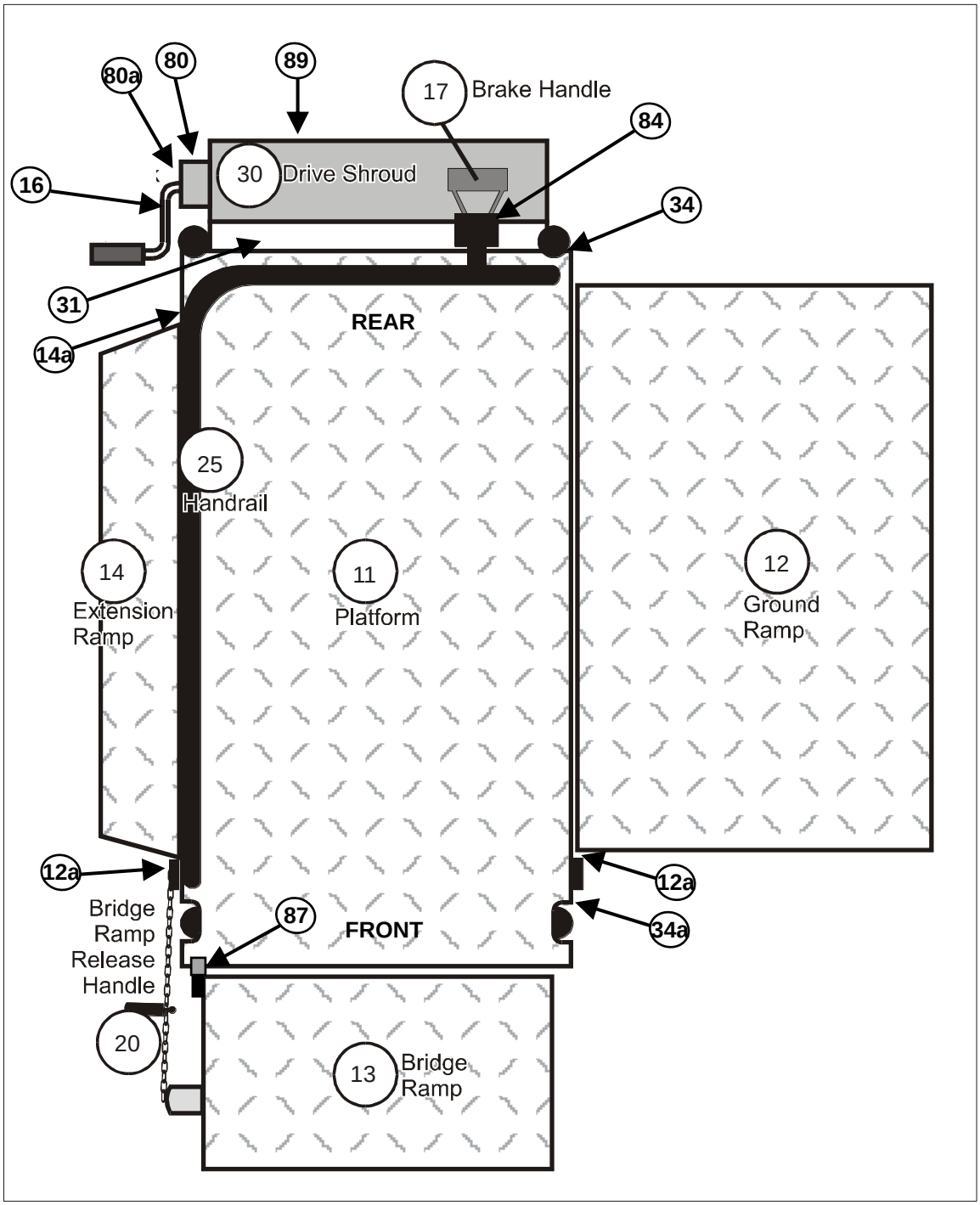

DRIVE ASSEMBLY

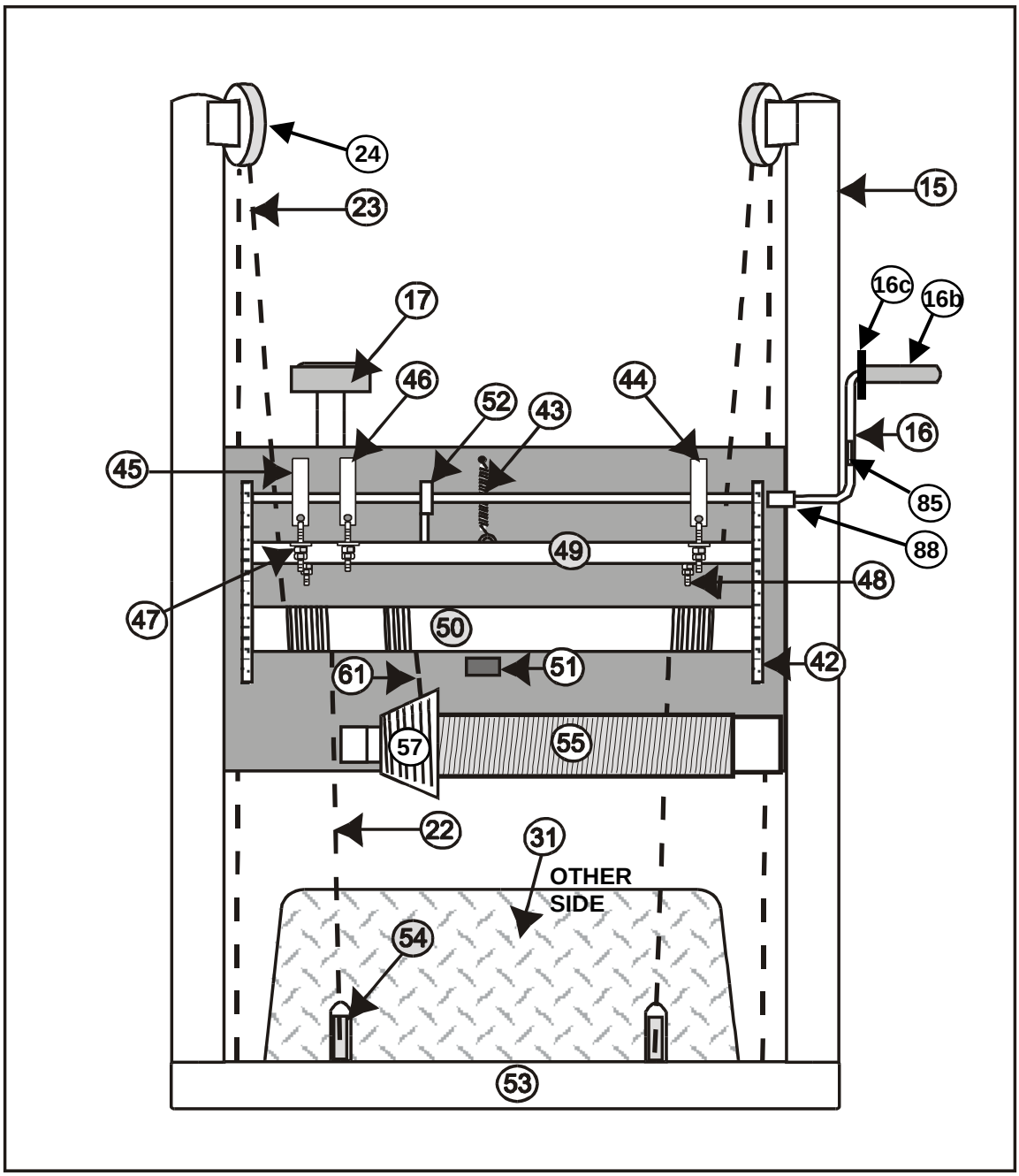

REAR PLATFORM ASSEMBLY

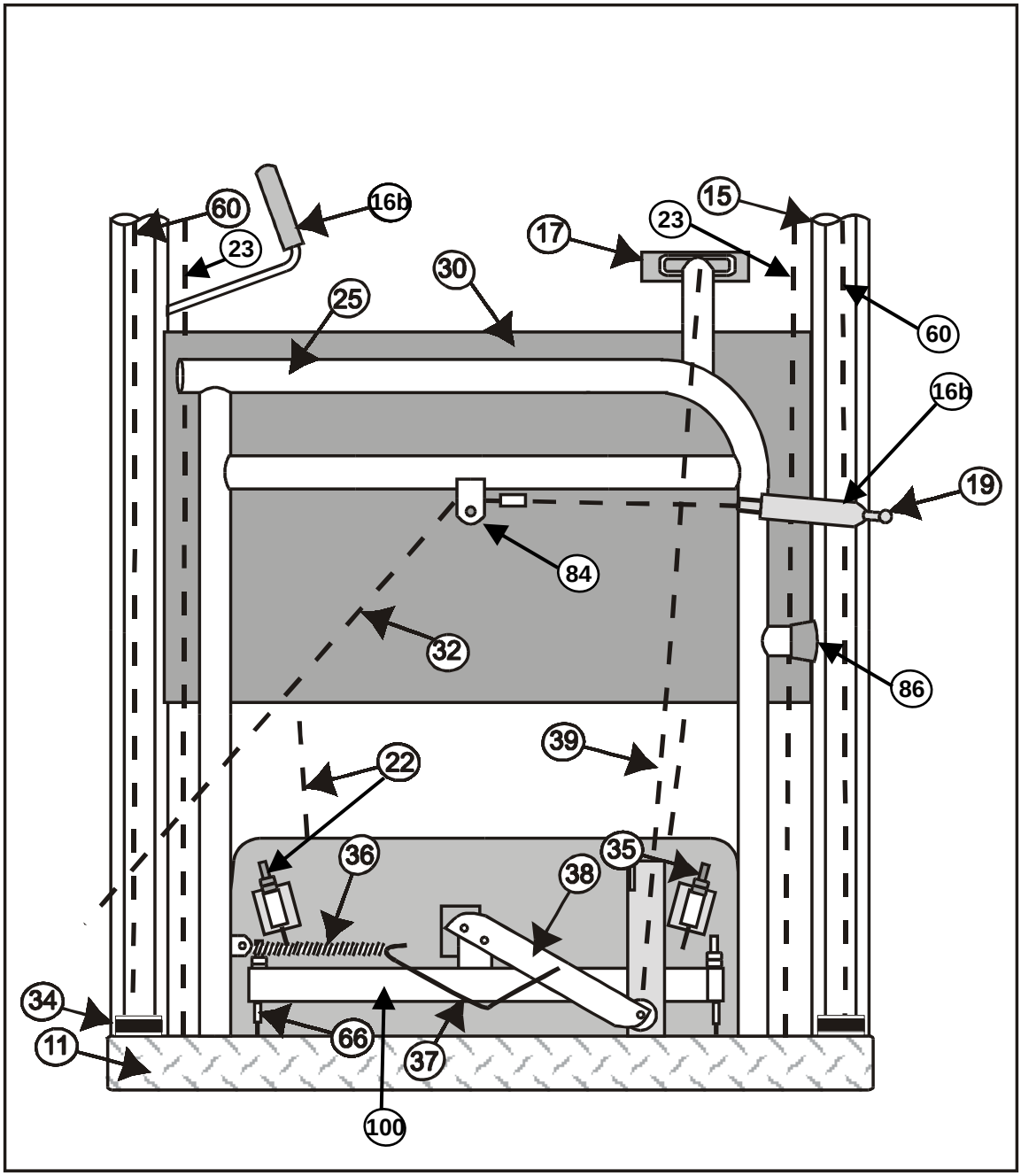

Note: Deck shroud is hidden in this diagram to view the components attached to the deck flange.

UNDERSIDE ASSEMBLY

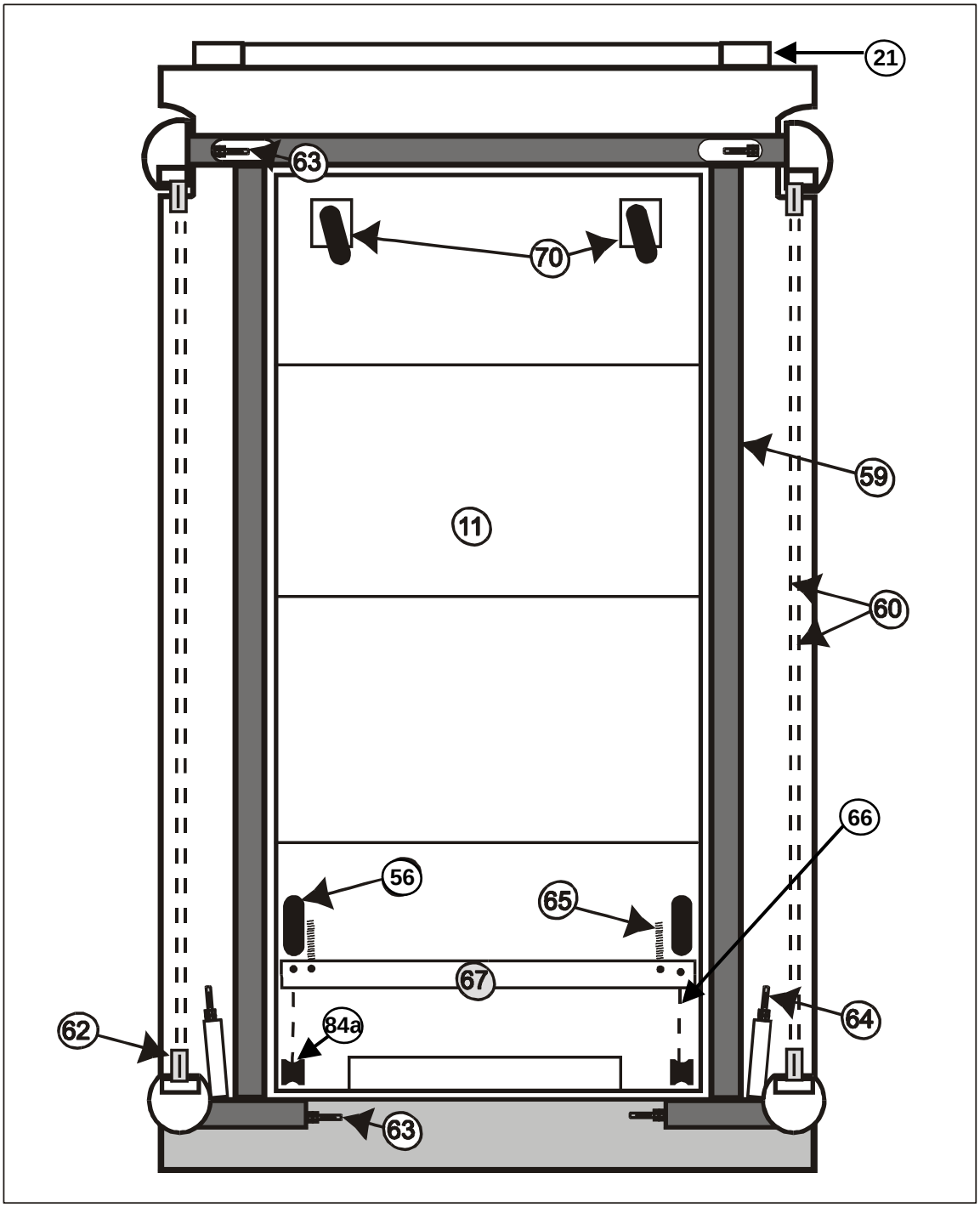

PARTS LIST

11	Main Platform (CX)
12	Ground Ramp (CX)
12a	Ground/Extension Ramp Pivot Bar
13	Bridge Ramp (CX or Option)
14	Extension Ramp
14a	Extension Ramp Spring
15	Corner Post
16	Hand Crank
16b	Blue Handle Grip
16c	Hand Crank Handle w/ Grip
17	Brake Handle
19	Ground Ramp Release Handle
20	Bridge Ramp Release Handle (chain)
21	Bridge Ramp Pivot Bar
22	Return Cable
23	Lifting Cable
24	Lifting Pulley
25	Handrail (CX)
30	Drive Shroud (w/ CX Decal)
31	Deck Shroud (CX)
32	Ground Ramp Cable (CX)
34	Post Guide Rear
34a	Post Guide Front
35	Return Cable Adjuster
36	Brake Return Spring 4”
37	Brake Return Spring Arm
38	Brake Lever
39	Brake Pull Cable
42	Drive Chain
43	Drive Frame Spring 4”
44	Right Brake Assembly
45	Left Brake Assembly
46	Return/Center Brake Assembly
47	Brake Adjuster*
48	Frame Brake Adjuster*
49	Drive Frame
50	Main Cable Drum
52	Steady Bearing
53	Automatic Leveler Shroud
54	Return Pulley
55	Platform Counterbalance Spring Complete Assembly
56	Main Travel Wheels (CX)
57	Counterbalance Cable Cone
59	Frame
60	Paralleling Cables
61	Counterbalance Cable
62	Paralleling Cable Pulley
63	Paralleling Cable Adjuster
64	Lift Cable Adjuster
65	Brake Activation Spring (CX) 2"
66	Wheel Brake Cable
67	Brake Bar
70	Front Caster Wheel Assembly
80	Crank Hub w/ Plastic (Aluminum Shroud)
80a	Crank Hub Plastic (Aluminum Shroud)
82	Brake dog pin*
82a	Brake dog*
84	Plastic Pulley
84a	Brake Cable Roller
85	Locking Cable
86	1” Grey End Bumper
87	5/8” Grey End Bumper
88	Crank Handle Spring
89	Operator Decal (CX)
100	Parking Brake Pull Beam

Notes:
* To view this part in more detail see the maintenance manual

MOBILIFT CX INSPECTION REPORT

NOTE: REFER TO MANUFACTURERS MAINTAINENCE MANUAL FOR ALL ADJUSTMENTS AND REPAIRS.
This checklist must be completed by individuals authorized by Adaptive Engineering Inc, familiar with standard mechanical procedures and able to read at a Grade 10 level. Contact Adaptive Engineering Inc. for any questions.

Serial Number_____

Customer: _____ Location:_____

#	DESCRIPTION	DONE
	GENERAL OPERATION CHECKS:	
1	Check the hand brake is working by pulling the blue brake handle from its saddle and hold it to the blue push handle on the shroud while moving the lift. Brakes should release when handle is pulled 1-3”.	
2	Check that the lift rolls and maneuvers easily	
3	Check that the brake handle returns to its saddle when released.	
4	Check that the crank handle swings in automatically when it is released.	
5	OPTIONAL: Remove Drive and Deck shrouds before testing to improve visibility during following tests	
6	**LOADED OPERATION**: Check the lift cranks up and down smoothly with 300-350lbs (135 to 160 kg.) Slight squeal or chatter is acceptable in down direction. Note: a full cycle up-down cycle should take no more than one minute.	
7	**FORCE TEST**: Check the force on the hand crank - with lift still loaded and raised to 12” (0.30 m) off the ground. With a spring scale, the force should be - UP: 10 – 20 lbs (4.5 to 9 kg) - DOWN: 3 – 15 lbs (1.3 to 6.8 kg)	
8	**DECK LEVEL**: Deck is level within ¼” (6mm). Crank lift about halfway up with no load and measure the distance from the platform to the top surface of the lower main frame at each corner. These measurements should be within ¼” (6 mm) of each other.	
	UNDERSIDE INSEPCTIONS: Tilt the lift back to inspect the underside of the Lift	
9	CABLE ADJUSTERS: Visually inspect all the cable adjusters to see that they are secure, and the double nuts are locked against each other. (6 places: 4 parallel, 2 lifting) Some rust and corrosion on the anchors is normal and not a safety concern.	
10	UNDERSIDE CABLES: Check that the paralleling cables are on their pulleys at both ends (4 places) and are not frayed, particularly where cables go into keyhole slot at bottom of post.	
11	CABLE TENSION: Check that a pull of 15 lbs. at the middle of each paralleling cable under the deck deflects it between ¾” and 2” (20 mm to 50 mm)	
12	PULLEYS: Check that paralleling pulleys (4) are in good condition and turn freely.	
13	WHEELS: Check that rear wheels rotate freely when brakes are off and lock when brake is applied and that rear wheel brake springs are in good condition, check that front casters rotate freely, check for wear on all wheels.	
14	LEVELER: If applicable, check that the automatic leveler device moves freely in its frame by pushing on one side at a time.	

Serial Number_____

	DRIVE INTERNAL COMPONENTS: Remove drive shroud (7 bolts)	
15	Check adjuster locking nuts on the drive are locked (5): 2 places on cross frame tube and 3 places at brake adjuster bolts.	
16	CABLES: Check that all the cables are in their grooves on the winding drum. Crank the lift to full height with no platform load and recheck the cables on the winding drum.	
17	COUNTERBALANCE CABLE: Check cable is wound around conical drum and attached at drive drum, and cable has no fraying.	
18	COUNTERBALANCE SPRING: Check spring is not broken or cracked. Spring should be well lubricated.	
19	CHAINS: Ensure that all drive chains are lubricated and in good condition, (no frozen links). Replace drive chain if worn: the center-to-center distance for 6 links should be 3” - 3.045” (77.3mm) which would be the max 1.5% stretch.	
20	BOLTS: Check that all bolts at drive mechanism have nylocks nuts engaged and all pivots are free.	
	DECK SHROUD INTERNAL COMPONENTS: Remove deck shroud (4 bolts)	
21	Check return cable adjuster nuts are locked (located under deck shroud)	
22	Check that WHEEL BRAKE RETURN SPRING inside deck shroud is connected and in good condition.	
23	**RAMP CABLES:** Check bridge ramp and ramp securing cables are operating and not frayed.	
24	**RAMPS:** Check all ramps lay flat (ground ramp, bridge ramp, extension ramp) and are not twisted/bent.	
25	**WELDS:** Check all visible welds for signs of cracking particularly all hinge points at deck and ramps.	
26	**FASTENERS:** Check all fasteners to make sure that the bolts engage the nylon of the locking nuts. Check with wrenches that the nuts on all visible cable adjusters are locked.	
27	**LIFTING CABLE TENSION:** With the platform just off the wheels, pull on each lifting cable just above the main shroud. A 20lb. pull should deflect this cable between 1/2’’ to 1’’ (12.7 mm – 39 mm). Both cables should be similar	
28	**LIFTING CABLE:** Check the full visible length of each lifting cable for corrosion or fraying, with particular attention to the point at which the lifting cable turns in under the platform. Do this with the lift at ground level and then again with the deck two feet above ground level	
29	**CABLE WINDING:** Wind the lift fully up and down, recheck that the return cables and lifting cables do not become loose throughout the full range of motion and that cables track properly on cable drum grooves.	
30	**CABLES INSIDE POST:** With the lift at aprox. 6” above ground, inspect the paralleling cables inside each corner post for fraying, particularly at the top and bottom of each post.	
31	**DECALS:** Re-install the shrouds and check that all decals are in good condition and legible, particularly the main pictogram on the drive shroud.	
32	**PLASTIC PARTS:** Check that handrails and push bar have blue snap-on parts, as well as	

	grey caps on stops (1 ground ramp stop, 2+ on bridge ramp)	
33	**LOAD TEST:** Conduct LOAD TEST (see below.)	

LOAD TEST

Serial Number_____

The lift must be re-load tested to 1800 lbs (820 kg) (3 times the design load) following this inspection or any repairs or adjustments.

Equipment Required for Testing:
1 – Calibrated Spring Scale (eg: fish scale type) up to 50lb
1 – 2” Strap or Chain 12ft long . Must have a working load limit of 2000lb or greater may be use for this test.
1 – 2x4 wood or similar 37” long

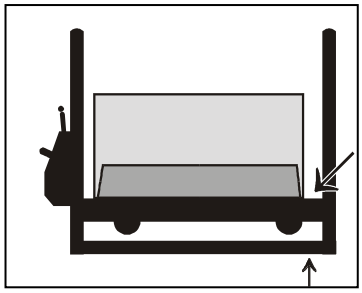

Instructions

1. Place 2x4 wood or similar across platform on top of the post guides in order to prevent platform from bending.

2. Slide one end of the Load Testing Cable under the Frame at the front of the lift (bridge ramp end)

3. Pull end of Load Testing Cable over the Deck and to the other end of the cable with the hook.

4. Attach the ends of the cable using the hook. Use 2x4 or similar wood brace across the deck sitting on top of the post guides as close to the posts as possible.



5. Use the Crank Handle to raise the deck until the Load Testing Strap begins to tighten.

6. Hook the Scale onto the Crank Handle next to the grip.

7. Pull the Scale at 90 degrees to the Crank Handle until the scale reads “50 lbs”. Hold the crank for about 3 seconds at 50 lbs. Listen for any noises that may signify stressed parts or cables.

8. Release the Crank Handle.

9. Remove the Load Testing Cable.

10. Raise the Deck to the top and then back down with the Crank Handle. Listen for any unusual noises. Load testing is complete.

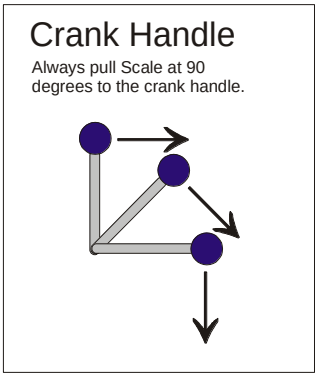

INSPECTION COMPLETION SIGN-OFF

Serial Number: _____
Inspector: _____ Signature: _____
Date: _____
Inspection Company: _____